History Stones.

Baluster railing system.

12-3-07

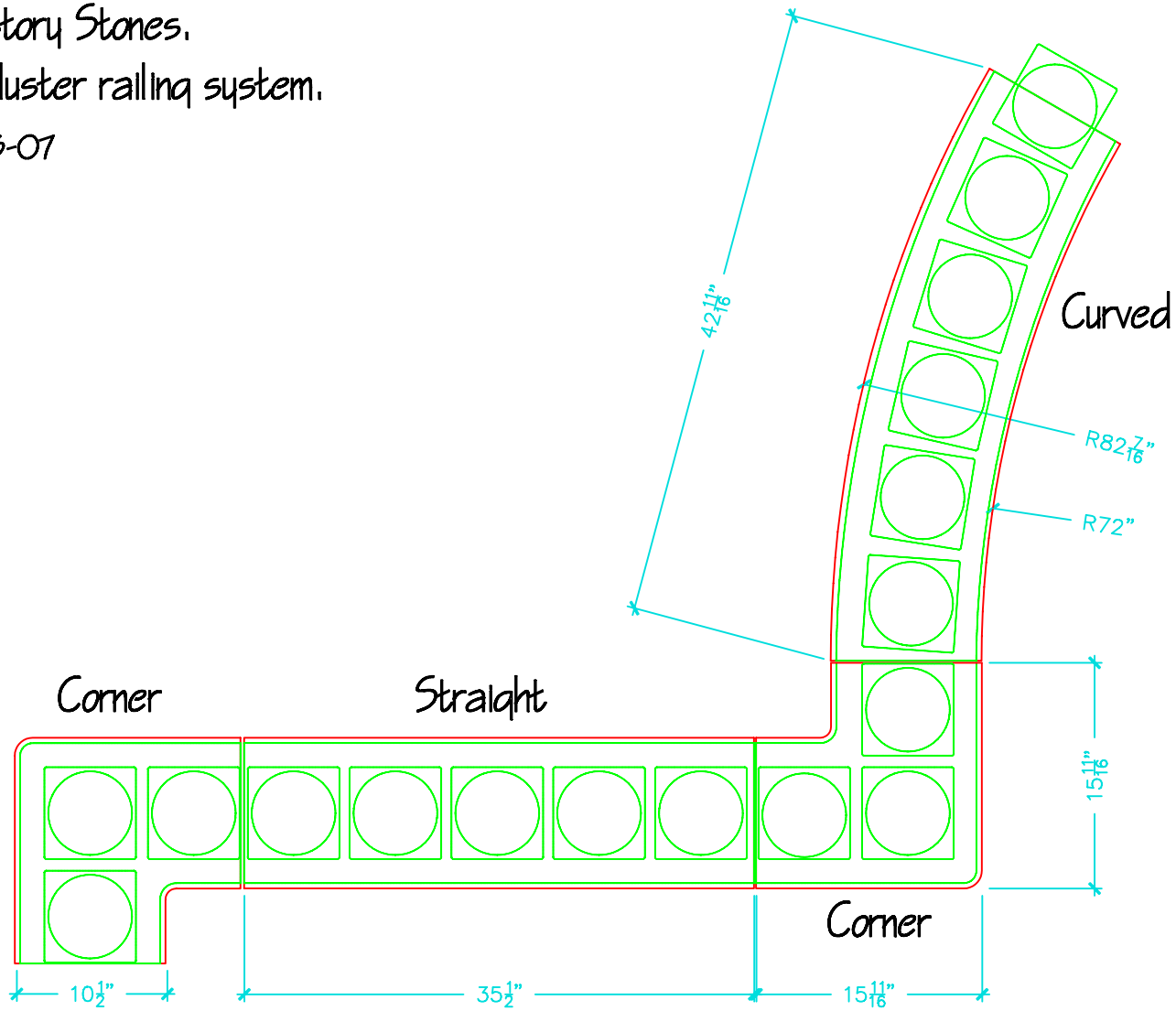

PLAN

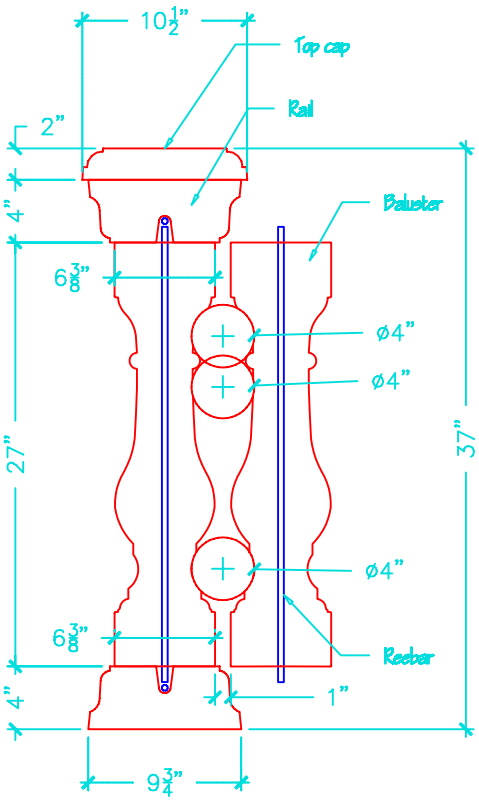

SECTION